PETERMAN LUMBER
10330 ELM AVENUE
FONTANA, CA 92337
PHONE (909) 357-7730
FAX (909) 357-7743

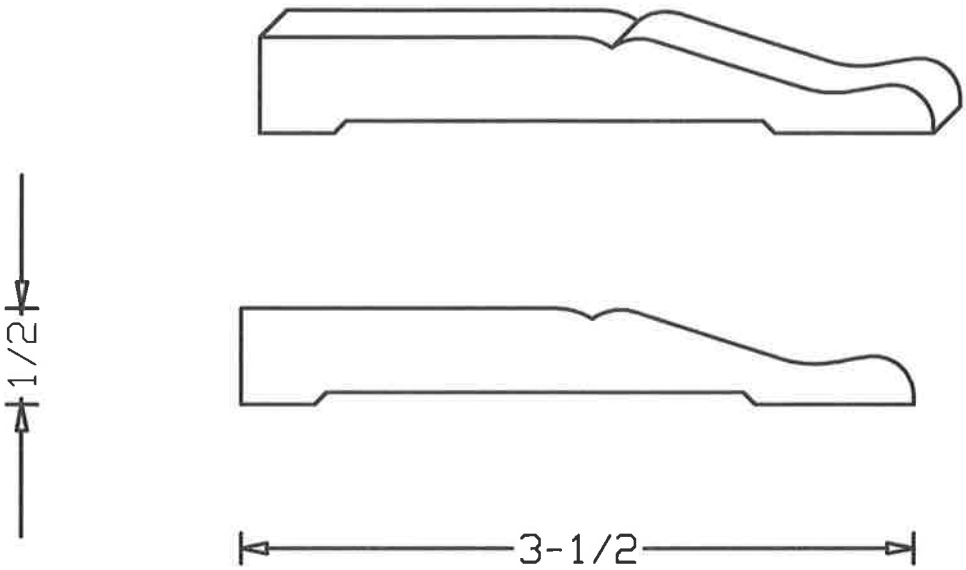


SALESMAN_____

Please sign or make
the appropriate changes.
Please FAX back.

X_____
DATE SIGNED __ / __ / 2015

CLIENT: PETERMAN

TITLE: P-202
DATE DRAWN: 3 / 30 / 2015
SHEET: 1 OF 1